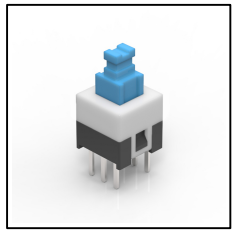

PUSHBUTTON SWITCH

P/N:PS071-06

Professional Manufacturer Since 2000

SPECIFICATIONS

Funtion: ON-ON
Contact Arrangement: DPDT
Termination: THD version

Mechanical

Actuation Force:	100～300grams
Life Expectancy:	10,000 Operations

Electrical

Contact Rating:	50mA @ 30V DC
Dielectric Strength:	250V AC for 1minute
Contact Resistance:	100mΩ Max.
Insulation Resistance:	100MΩ Min.
Travel:	2±0.5mm

Environmental

Operating Temperature:	-25～+70℃
Relative Humidity:	(40℃)≤95%

Materials

7.Stem:	Blue POM
6.Cover:	White POM
5.Hook:	Stainless steel
4.Spring:	Carbon Spring Steel Wire
3.Contact:	Copper with Silver Cladding
2.Holder:	Black GP.PA66
1.Terminal:	Copper with Silver Cladding

Packaging

Bulk Package

Inner Package:	Plastic bag
Outter Package:	Carton

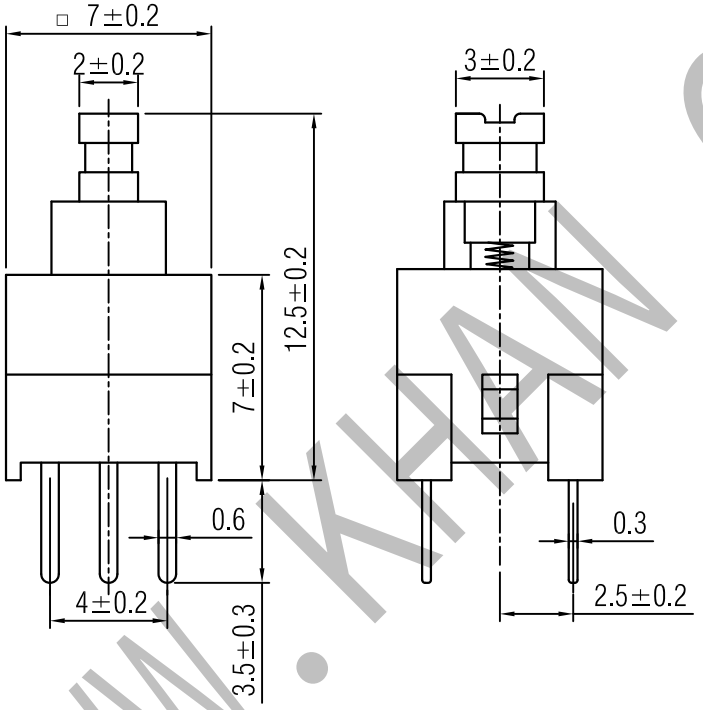

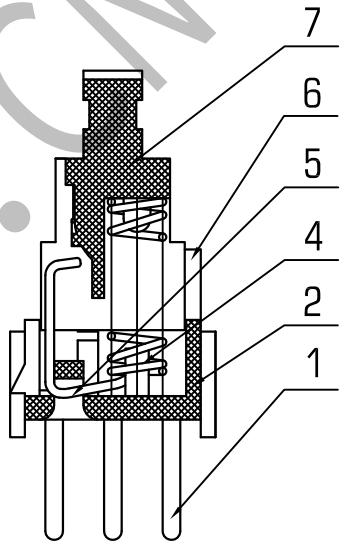

CIRCUIT DIAGRAM

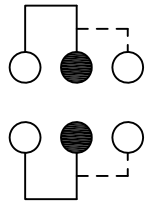

P.C.B. LAYOUT

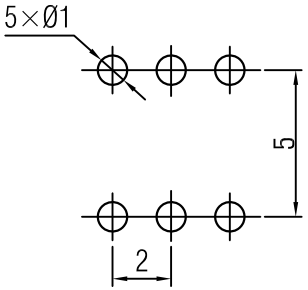

WWW.KHAN.CN

WENZHOU KHAN ELECTRONIC

VERSION		PROJECTION	DESIGN	朱树清
KH14FE22E		Dirnensions are shown:mm(inches)	DRAWN	彭中菊
SCALE	SIZE		APPROVAL	徐君辉
4:1	A4	2020.04.20		

WENZHOU KHAN ELECTRONIC CO.,LTD. Add:No.92 Huifeng Road, Songhu Industrial, Yueqing 325600. Zhejiang , China Tel:+86-577-62560700 Fax:+86-577-62530255 E-mail: info@khan.cn ; export@khan.cn

http://www.khan.cn/